SII Printek Inc.

Grayscale Printhead

508GS Inkjet Printhead

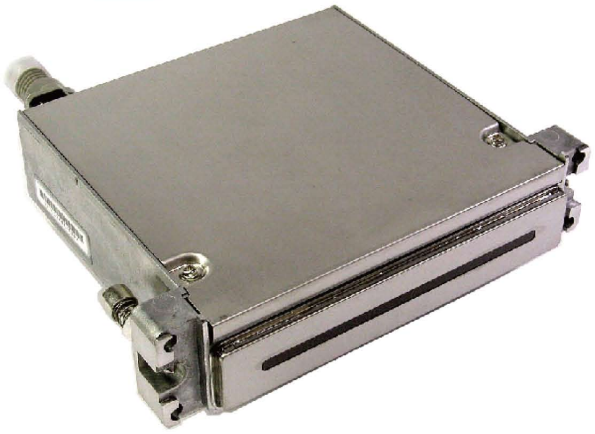

■ High productivity

■

■ Various ink types

- 508GS can be used with almost all type of digital inks: aqueous, UV, solvent and oil based

■ Ready-to-use printhead

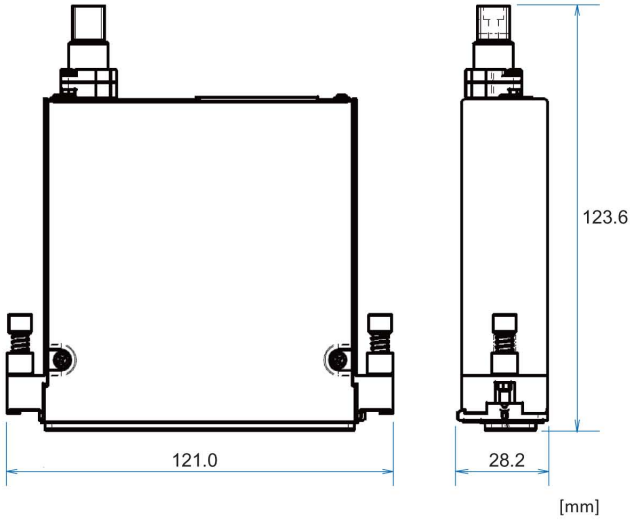

Active nozzles	508	Drop volume *1	12 to 84 [pL]
Numbers of rows	2	Jetting frequency *1	Up to 28 [kHz]
Number of grey levels	8	Maximum productivity *1 (Jetting frequency × Drop volume)	320 [μL/sec] / head (630 [nL/sec] / nozzle)
Ink inlets / ink outlets	1		
Native nozzle resolution	180 [npi]		
Print width	71.54 [mm]	Ink type	Aqueous, UV, Solvent, Oil based
Dimensions (W×D×H)	121 × 28.2 × 123.6 [mm]		
Printhead weight	Less than 300 [g]	Driving interface	Parallel interface

*1 Depend on ink and ink supply system

Specifications can be modified without prior notice.

Please contact for more details.

SEIKO
SEIKO HOLDINGS GROUP